SK79 white

ROBUST AND CHILDPROOF

House and flat doors with glass inserts can be secured with this lockable door chain.

You can protect doors with glass inserts or narrow frame profiles from being entered by unauthorised third parties with this lockable chain. The hardened special chain is particularly suitable for doors with glass inserts or narrow frame profiles due to its narrow chain bracket. The chain can be securely locked with a key and then opened just a crack to always know exactly who is at the door. A childproof safety catch protects the chain from careless children's hands.

Technologies

- Hardened chain
- Child-proof safety catch: Only a key will operate the lock
- Rotating quality 4-pin tumbler cylinder
- Visible chain length: 15 cm
- Incl. two keys
- Easy to use

Operation and use

- Main entrance doors and flat entrance doors
- A high security Door Chain, specially designed for doors with glass panels, narrow aluminium or PVC frames
- Internal and external locking

Variants

Subject to technical modifications. We assume no liability for mistakes and printing errors. © ABUS 05/2026

SK79 white

- Finishes: silver, white

Technical data - SK79 white

Security Level Home Security	6
Weight	542 g
colour	white
lockable door chain guard	Yes
EAN	4003318057861

Technical drawing

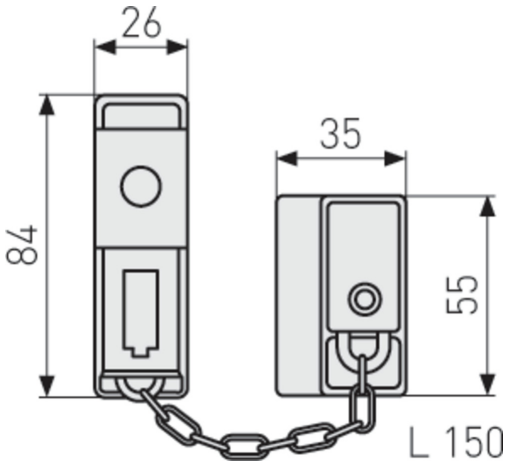

Subject to technical modifications. We assume no liability for mistakes and printing errors. © ABUS 05/2026