145/30 silver



NINE BRIGHT COLOURS

Our combination lock 145 is available in nine bright colours and a special coating for particularly robust protection.

The ABUS 145 padlock consists of a solid aluminium lock body and a steel shackle. It is suitable for closing bags, suitcases, caskets, lockers and more. We recommend the variants 145/20 to 145/30 if you want to insure low value assets or objects with a low risk of theft. The large 145/40 version is very suitable for securing medium value assets or objects with an average risk of theft. The number code can be individually set with three or four number wheels, depending on the size of the lock. Thanks to their light weight, our combination locks 145 are easy to use at any time, even when on the move.

Technologies

- Solid aluminium lock body with anodized coating – corrosion resistant
- Spring loaded shackle for a better setting of the opening code
- 145/20 and 145/30: Individually resettable 3-digit code
- 145/40: Individually resettable 4-digit code
- Handy operation without key, low weight
- High value of recognition by intensive colours

Operation and use

- 145/20 and 145/30: To secure valuables/goods of lesser value or at a low risk of theft
- 145/40: To secure valuables/goods of medium value or at an average risk of theft
- E.g. to secure luggage, lockers in schools and sports centres, cash boxes, jewel cases, cupboards, tool boxes,

Subject to technical modifications. We assume no liability for mistakes and printing errors. © ABUS 11/2026

145/30 silver

switchboards, etc.

Variants

- Sizes: 20, 30 and 40 mm
- 9 colours: blue, yellow, green, purple, orange, red, brown, titanium, silver

Technical data - 145/30 silver

Depth e	15,5 mm
Height f	65 mm
Horizontal clearance b	14 mm
Keyed alike	No
Locking type	number combination
Security Level Home Security	3
Security card	No
Shackle diameter d	5 mm
Vertical clearance c	25 mm
Weight	54 g
Width a	31,5 mm
color of facets	silver
colour	silver
EAN	4003318466205

Technical drawing

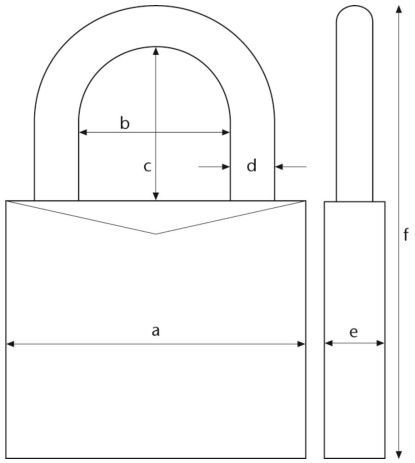

Subject to technical modifications. We assume no liability for mistakes and printing errors. © ABUS 11/2026